1604

Overflow valve
Bellow sealed

PN 10-40 DN 15-150

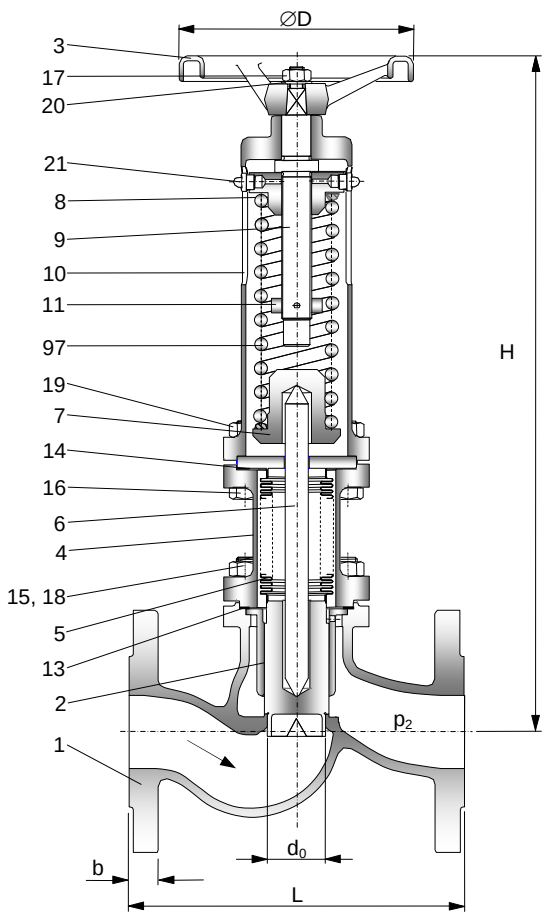

Top part
Open spring hood with compression spring and adjusting spindle

Setting ranges in bar
When using separate springs
1 - 2,5
2,5 - 6,0
6,0 - 10,0
10,0 - 16,0
16,0 - 22,0
22,0 - 30,0
30,0 - 40,0

Stem sealing
Bellow

Obturator
Slot cone

Body seat
Integral seat

Valve ends
Flanges acc. to EN 1092-1 (DIN 2501 Part 1)

Requirements and tests
Tightness test with max. 6 bar (Air),
Strength test with $p_{2max.}$ (Water,)
Function test with set pressure p_0 (Air)

Marking
Nominal size DN
Setting range
Max. back pressure p_2
Body material
Manufacturer brand
Flow direction arrow

Pos.	Denomination	Material 1.0619	Material 1.4408	Pos.	Denomination	Material 1.0619	Material 1.4408
1	Body	1.0619	1.4408	13	Gasket	Graphite / 1.4401	Graphite / 1.4401
2	Cone guide bush	1.4021	1.4571	14	Gasket	Graphite / 1.4401	Graphite / 1.4401
3	Handwheel	0.6020	0.6020	15	Stud bolt	5.6	A4 - 70
4	Interim piece	Stahl	1.4571	16	Stud bolt	5.6	A4 - 70
5	Bellow insert	1.4541	1.4571	17	Hex. nut	5	A4
6	Stem	1.4021	1.4021	18	Hex. nut	5	A4
7	Spring cup	Stahl	Stahl	19	Hex. nut	5	A4
8	Spring cup	Stahl	Stahl	20	Washer	Stahl	Stahl
9	Adjusting spindle	1.4021	1.4021	21	Lubricating nipple	5.8	5.8
10	Spring hood	Stahl	Stahl	97	Compression spring	Steel	Steel
11	Rating nut	Stahl	Stahl				

[1] further materials are shown in the technical part

Face-to-face dimension acc. to EN 558-1 series 1 (DIN 3202-F1)

DN		15	20	25	32	40	50	65	80	100	125	150
L		130	150	160	180	200	230	290	310	350	400	480
H		375	395	395	390	450	460	520	685	720	840	875
$\varnothing d_0$		16	20	25	32	40	40	50	65	80	100	125
∅D		120	120	120	120	140	140	140	180	180	225	225
PN 10	b	use PN 40						use PN 16				
	kg											
PN 16	b							18	20	20	22	22
	kg											
PN 25	b	use PN 40						use PN 40				
	kg											
PN 40	b	16	18	18	18	18	20	22	24	24	26	28
	kg	6,8	7,1	8,7	11,5	17,3	21,5	25,6	36,9	54		
p_2		17	18	18	18	11	11	9	9	9	6	6

p_2 = max. back pressure at the outlet side

Pressure/Temperature ratings in bar g at Temperature in °C

Material	PN	50°C	100°C	120°C	150°C	200°C	250°C	300°C	350°C	400°C			
»**1.0619**«	**10**	10,0	8,7	8,7	8,0	7,2	6,6	6,0	5,6	5,4			
GP240GH	**16**	16,0	14,0	14,0	12,8	11,6	10,6	9,6	9,0	8,6			
EN 10213	**25**	25,0	21,8	21,8	20,0	18,2	16,6	15,1	14,0	13,5			
	40	40,0	35,0	35,0	32,0	29,1	26,6	24,1	22,5	21,6			
»**1.4408**«	**10**	10,0	8,2	8,2	7,2	6,2	5,7	7,5					
GX6CrNiMo18-10-2	**16**	16,0	13,2	13,2	11,6	10,0	9,1	12,0					
EN 10213	**25**	25,0	20,7	20,7	18,1	15,7	14,2	18,7					
	40	40,0	33,1	33,1	29,0	25,1	22,8	20,5					

Modifications

Heating jacket
Double walled bellow suitable for back pressure $p_{2max.}$ = 25 bar

Operation

The overflow valve is used for the limitation of the pressure within a pipe system. When exceeding the set pressure the overflow valve opens. The set pressure must be calculated with the process data. The overflow valve with bellow is independent from the back pressure.

Example for operation

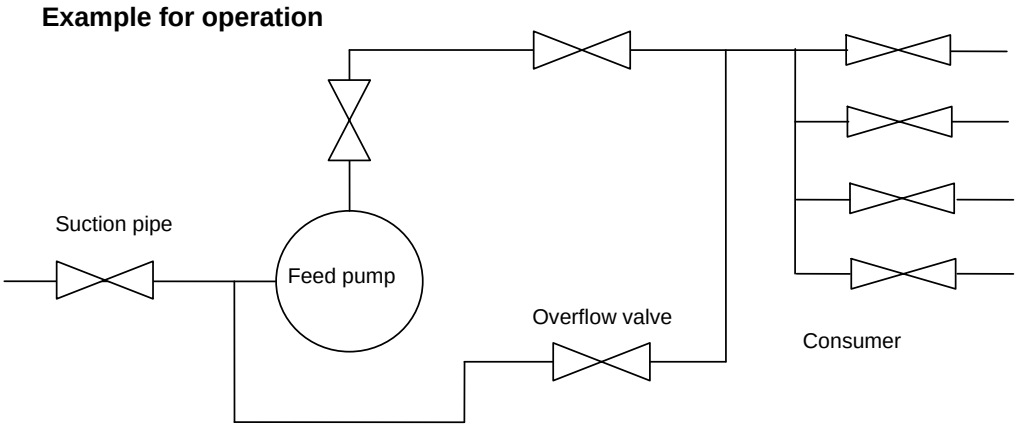

Installation

The above plan shows a typical case of operation for the overflow valve. The plan contains the feed pump with several consumers and the overflow valve in the by-pass. If the required discharge flow will be reduced by closing the consumer, the system pressure rises up. When exceeding the set pressure the overflow valve opens and the flow-rate can be repatriated to the suction pipe or to the tank. Thus a constant system pressure can be ensured.
Piping is to bed in such a manner that injurious thrust and bending forces are kept away from the valve casings.

KLAUS UNION · Blumenfeldstrasse 18 · D-44795 Bochum · Tel. +49 (0)234 45 95-0 · www.klaus-union.de
KLAUS UNION · PO Box 10 13 49 · D-44713 Bochum · Fax +49 (0)234 45 95-7000